DWG.No.JMP1-61-04

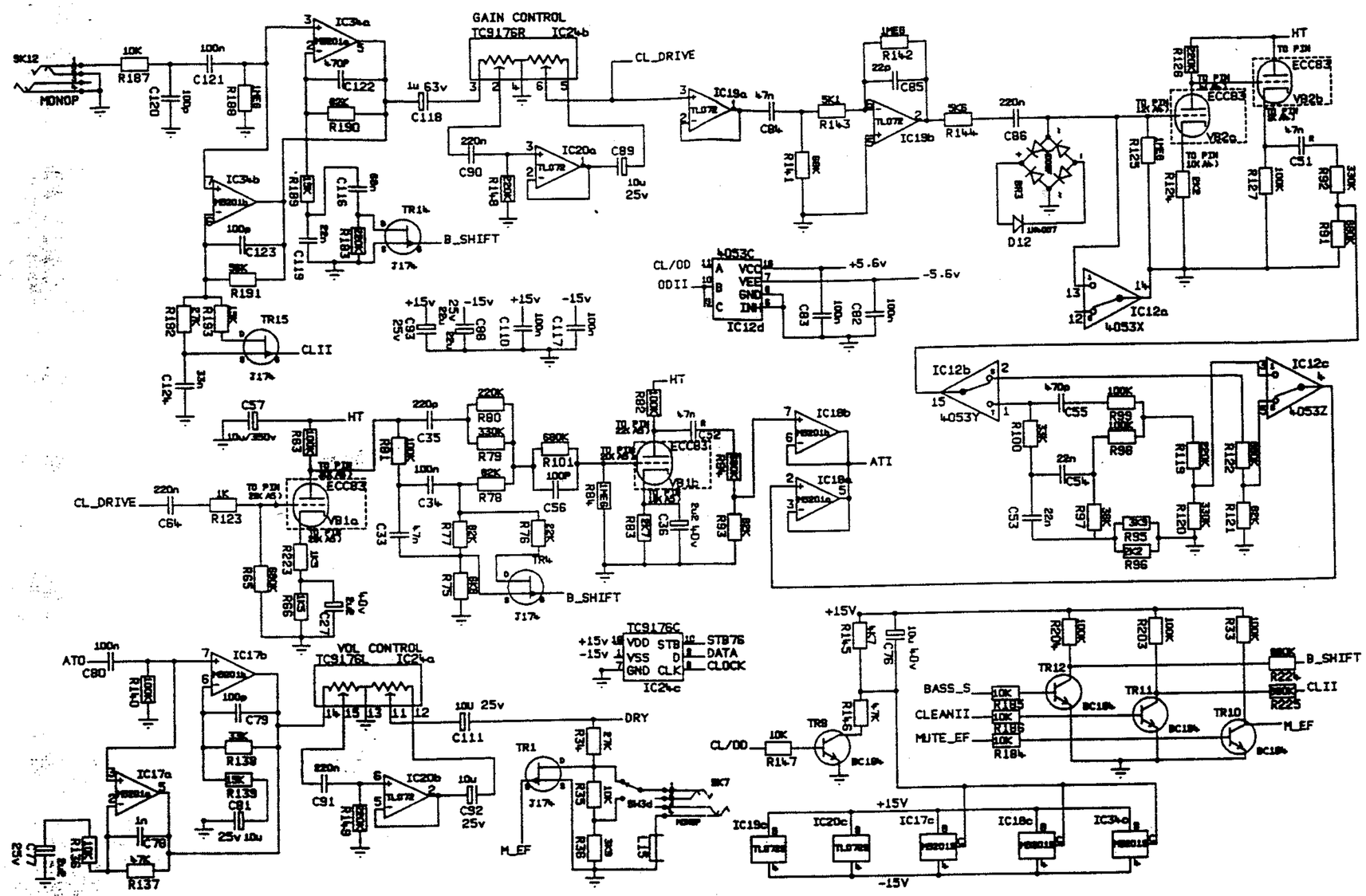

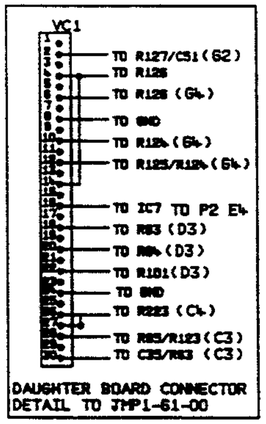

DAUGHTER BOARD CONNECTOR
DETAIL TO JMP1-61-00

ATO TO P3 B1
DRY TO P4 C3
CL/OD TO P1 E3
HT TO P1 C3
ATI TO P1 E3
BASS_S
CLEAN II } TO P5 E3
MUTE_EF

ISS	ECO NUMBER	DATE

UNSPECIFIED HOLE DATA

A		H	
B		J	
C		K	
D		L	
E		M	
F		N	
G		P	

MATERIAL
MATERIAL THICKNESS
INTERNAL BEND RADII
EXTERNAL B/A
BEND SIZE
DRAWN T.F DATE 08/04/92
CHECKED DMS DATE
APPROVED 2EB DATE 20.5.92

DIMENSIONS IN
TOLERANCE (UNLESS OTHERWISE STATED)
DIMENSIONAL
CENTRES
ANGULAR
MODEL JMP1

Marshall

COPYRIGHT EXISTS ON THIS DOCUMENT. IT MUST NOT BE USED FOR ANY PURPOSE THAN THAT FOR WHICH IT IS SUPPLIED AND MUST NOT BE COPIED (IN WHOLE OR IN PART) WITHOUT WRITTEN PERMISSION FROM
© JIM MARSHALL (PRODUCTS) LTD.
DENBIGH ROAD, BLETCHLEY, MILTON KEYNES, MK1 1DQ.
TEL (0908)375411 FAX (0908)376118

TITLE
CHANNEL CCT
1 OF 6 A2
DWG.No JMP1-61-04
ISSUE 1